STA

vibro and grouting equipment

- VIBRO STA 10000
- VIBRO STA 7500
- VIBRO STA 7500 IR
- VIBRO STA 5000

Vibroflottation

vibro and grouting equipment

Vibroflottation

Ground treatment with the VibroSTA method meets a wide range of bearing capacity and reliable ground improvement requirements and provides an economical alternative to more expensive deep foundation technologies.

The equipment designed and manufactured by STA was born at the beginning of the '80 years with the first hydraulic vibroflots. The improvement of the equipment has never stopped during the years increasing the quality and the range of accessories. A particular elastic isolator completely stops the vibrations from the head of the VibroSTA. This isolator is very simple and strong and it has been manufactured also for other constructor's equipment.

The constant request of more and more productivity and the application of the VibroSTA method in a wide range of soils has created a new method of application named Bottom Feed. For soft saturated more cohesive soils not compactable. The VibroSTA penetrates to the required depth displacing the soil laterally, then it is replaced by stones. The stones which are also compacted create a so called "stone column". With a second pipe near the main extension tubes, the stones are carried into the hole near the tip of the VibroSTA optimizing works in deep water or in particular soft soils.

The whole equipment is composed by a vibrating part which moves thanks to an internal rotative eccentric mass and a pulley block linked to the crane with suspension ropes. The extension pipes link the main parts in order to reach the requested length of the VibroSTA.

A stone tank can be applied at the top of the VibroSTA for the bottom feed method.
The whole system is powered by a due hydraulic power pack designed and manufactured by STA.

Vibroflottazione

Tecnica ormai consolidata e ben conosciuta da parecchi anni, la vibroflottazione è uno tra i metodi di trattamento del suolo tra i più economici se comparato ad altre tecniche di fondazioni speciali. L'attrezzatura progettata e costruita da STA nasce con primi aghi per vibroflottazione all'inizio degli anni '80 per poi continuare nella propria evoluzione migliorandone i particolari e gli accessori di funzionamento. Tra testa vibrante e le prolunghe è stato inserito un giunto di isolamento delle vibrazioni sempre più sempice ma allo stesso tempo più robusto e funzionale fino ad arrivare a fornire il proprio modello anche ad attrezzatura di altre marche.

La richiesta di produttività sempre maggiore e tecniche nuove di produzione hanno fatto in seguito nascere la necessità di accompagnare il materiale di compattazione fino in testa alla parte vibrante con il sistema di Bottom Feed affiancando alle prolunghe del vibroflottatore un condotto per la ghiaia che accompagna il materiale fino alla punta dell'ago ottimizzando interventi in acqua od in terreni particolarmente incoerenti.

L'attrezzatura è composta da una parte vibrante azionata dalla rotazione di una massa interna eccentrica, da una parte alta di sospendita e da differenti prolunghe della lunghezza di circa 5 metri ciascuna a seconda della profondità di lavorazione richiesta.

L'attrezzatura può essere abbinata dal sistema di scarico della ghiaia composta da una tramoggia ed una serie di tubature che solidali al vibro convogliano la ghiaia in prossimità della massa vibrante.
Il tutto è alimentato da una centrale oleodinamica di adeguata potenza anch'essa realizzata secondo progetto e disegni della S.T.A. srl.


633
SENNEBOGEN
NEW HOLLAND

vibro and grouting equipment

VIBRO STA 10000

1.700/1.900 r.p.m.
Power of VibroSTA *Puissance max du vibreurSTA* 210 kW
Operative frequence *Fréquence opérationnelle* 28 Hz
Operative centrifugal force *Force centrifuge opérationnelle* 360 kN
Amplitude *Amplitude* 26mm
Wear shield *Bouclier de protection*
easy to replace and manufactured with wear resistant steel
facilement remplaçable et construit avec des matériaux de haute résistance
Pulley head *Partie suspendue*
predisposed for oil and water links raccords *pour l'eau et l'huile hydraulique*
Extension pipes *Extension pipes*
Variable lenght available
Tuyaux de raccordement avec longueurs variables en fonction de l'application
Total weight *Poids total* 4.200 Kg (10 m applications)
Weight of extension *Poids rallonges* 1.300 Kg

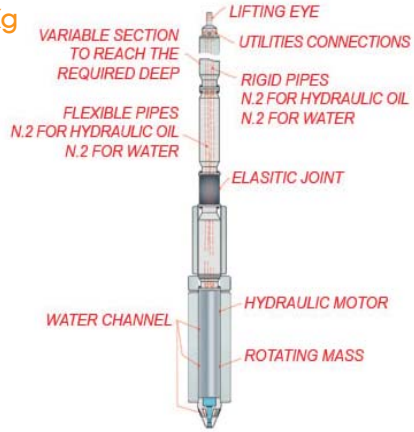

vibro and grouting equipment

VIBRO STA 7500

1.700/1.900 r.p.m.

Power of VibroSTA *Puissance max du vibreurSTA* 154 kW

Operative frequence *Fréquence opérationnelle* 30 Hz

Operative centrifugal force *Force centrifuge opérationnelle* 230 kN

Amplitude *Amplitude* 26mm

Wear shield *Bouclier de protection*

easy to replace and manufactured with wear resistant steel

facilement remplaçable et construit avec des matériaux de haute résistance

Pulley head *Partie suspendue*

predisposed for oil and water links raccords *pour l'eau et l'huile hydraulique*

Extension pipes *Extension pipes*

Variable lenght available

Tuyaux de raccordement avec longueurs variables en fonction de l'application

Total weight *Poids total* 3.800 Kg (10 m applications)

Weight of extension *Poids rallonges* 1.300 Kg

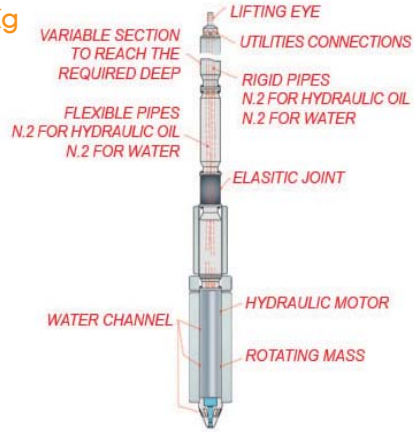

vibro and grouting equipment

VIBRO STA 7500 IR

2.400/3.000 r.p.m.

Power of VibroSTA *Puissance max du vibreurSTA* 154 kW

Operative frequence *Fréquence opérationnelle* 50 Hz

Operative centrifugal force *Force centrifuge opérationnelle* 230 kN

Amplitude *Amplitude* 12 mm

Wear shield *Bouclier de protection*

easy to replace and manufactured with wear resistant steel

facilement remplaçable et construit avec des matériaux de haute résistance

Extension pipes *Extension pipes*

Variable lenght available

Tuyaux de raccordement avec longueurs variables en fonction de l'application

Total weight *Poids total* 3.300 Kg (10 m application)

Weight of extension *Poids rallonges* 1.100 Kg

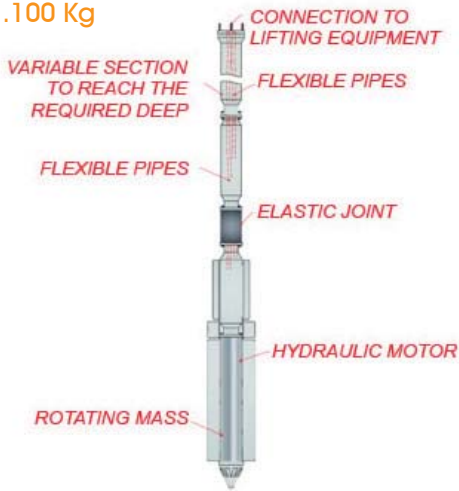

vibro and grouting equipment

VIBRO STA 5000

3.000 r.p.m.

Power of VibroSTA *Puissance max du vibreurSTA* 112 kW

Operative frequence *Fréquence opérationnelle* 50 Hz

Operative centrifugal force *Force centrifuge opérationnelle* 120 kN

Amplitude *Amplitude* 9,5 mm

Wear shield *Bouclier de protection*

easy to replace and manufactured with wear resistant steel

facilement remplaçable et construit avec des matériaux de haute résistance

Extension pipes *Extension pipes*

Variable lenght available

Tuyaux de raccordement avec longueurs variables en fonction de l'application

Total weight *Poids total* 3.800 Kg (13 m)

Oil flow *Oil flow* 180 lpm

Pressure *Pressure* 310 bar

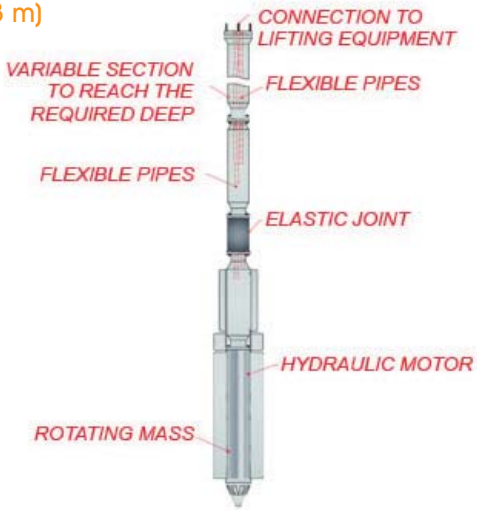

vibro and grouting equipment

DATA LOGGER

The Data Logger collects real time data such as:

- pressure
- rate of depth
- flow rates
- load and pulling force

The collection of all such data are managed by the due software in order to virtually rebuilt “the story” of the different columns.

The Data Logger System is usefull to control the vibrocompactation of the soil and the working depth.

The STA System can also be configured not only for depth and vibrocompactation control but also for loading the gravel at the different steps of the stone column.
The Data Logger displayis normally positioned on the crane cabin.

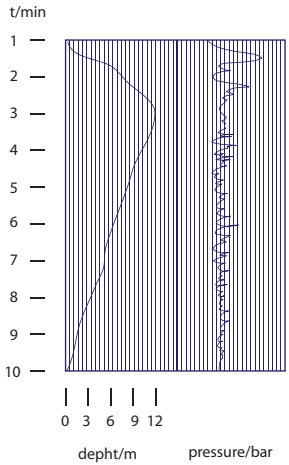

vibro and grouting equipment

POWER PACK

POWER PACK V. 7500	
Engine power	220 KW
Operative oil flow	250 lpm
Oil flow max	290 lpm
Pressure	340 bar
Iol tank	1500 lt
Width	2000 mm
Lenght	3600 mm
Height	2050 mm

The Vibro STA is proposed with different models of water pumps that can be normally powered by the power pack V. 7500

vibro and grouting equipment

BOTTOM FEED

- BOTTOM FEED SYSTEM FREE HANGING
- BOTTOM FEED SYSTEM ON PILING RIG

vibro and grouting equipment

BOTTOM FEED SYSTEM ON PILING RIG

BOTTOM FEED SYSTEM FREE HANGING

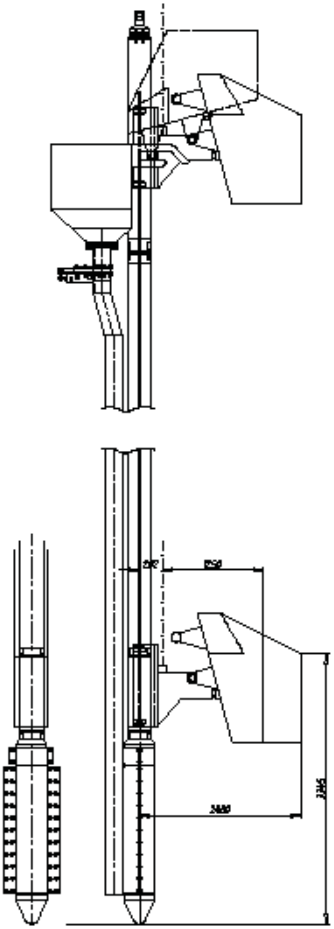

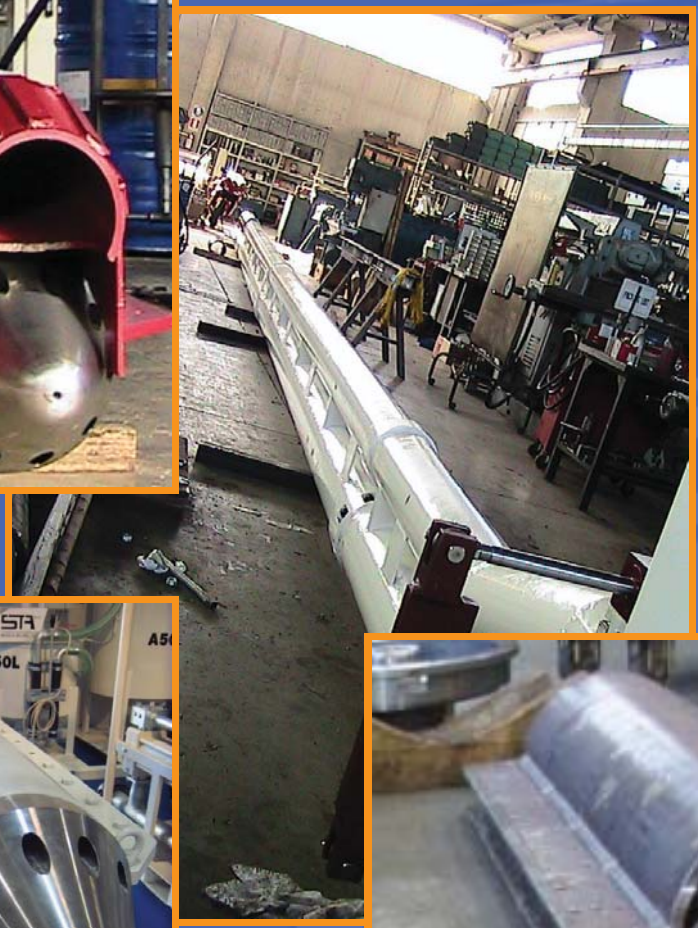

STA

www.sta-milano.com

S.T.A. srl - Via delle Industrie 2 - 20060 Mediglia (Mi) - Italia
tel +39 02 90661181 - fax + 39 02 90660421 - e-mail: contact@sta-srl.info